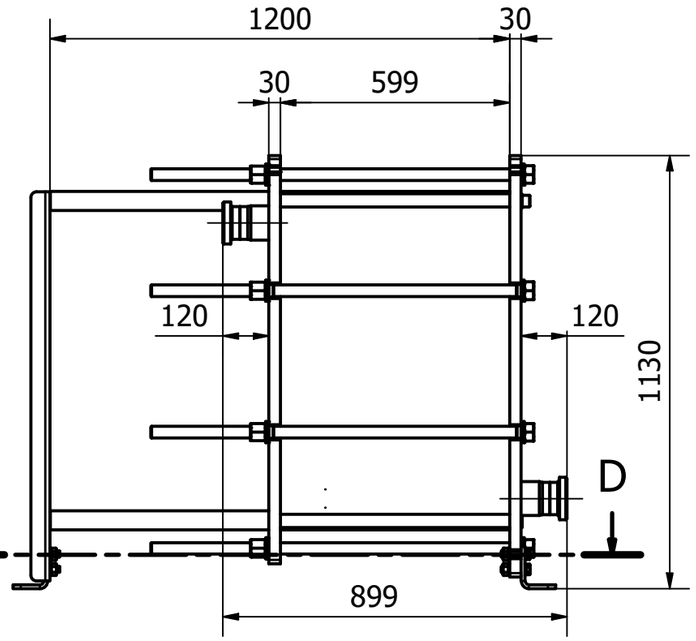


SIDE VIEW

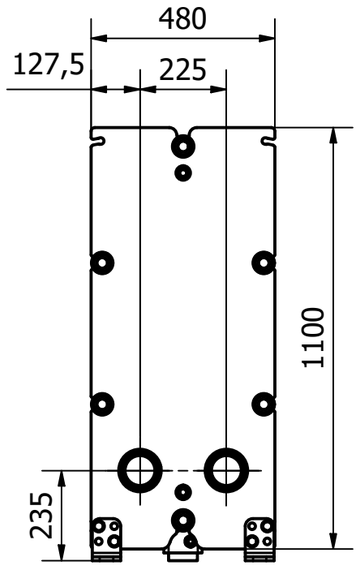


FRONT VIEW

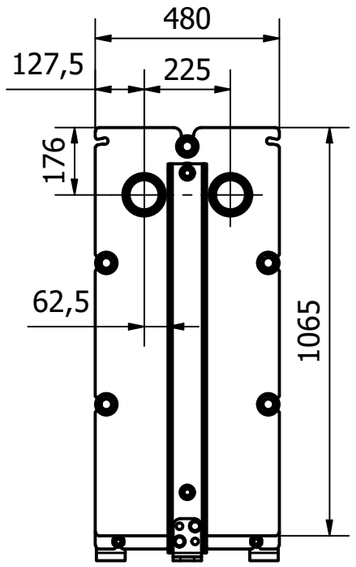


BACK VIEW

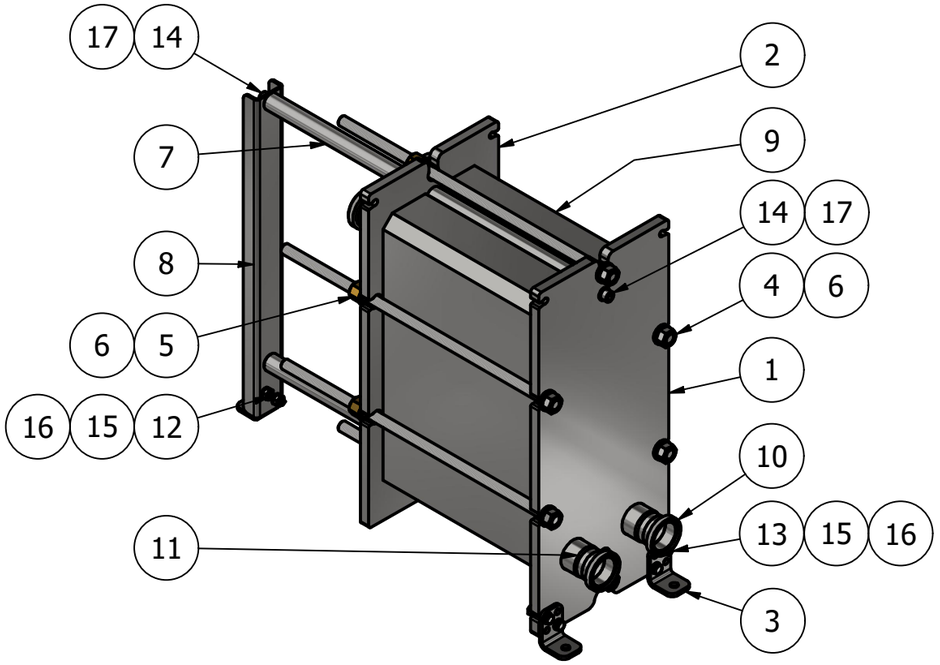


ISOMETRIC VIEW

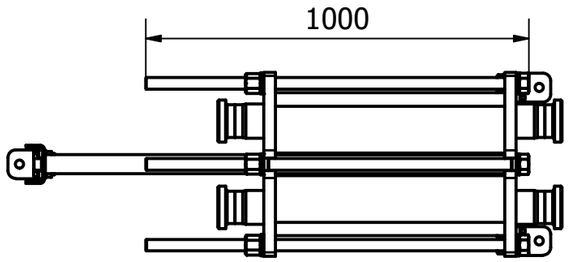


TOP VIEW

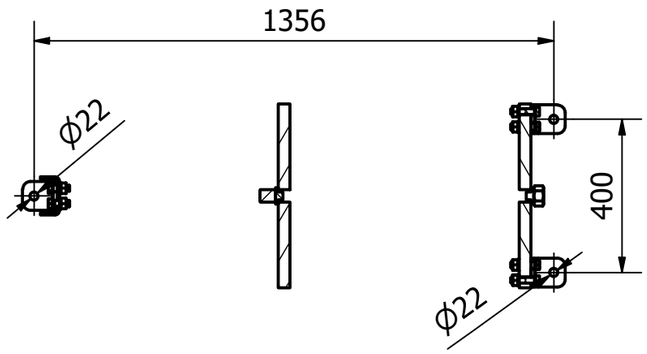


SECTION D-D ( 1 : 16 )

| ITEM | QTY | DESCRIPTION | SIZE | MATERIAL | COMMENTS |
|---|---|---|---|---|---|
| 17 | 4 | M20 Washer | | SS 304 | |
| 16 | 12 | M16 Washer | | SS 304 | |
| 15 | 6 | M16 Hex Nut | | SS 304 | |
| 14 | 4 | M20x60 Socket HD Cap Screw | | SS 304 | |
| 13 | 4 | M16x65 Hex HD Bolt | | SS 304 | |
| 12 | 2 | M16 x 45 Hex HD Bolt | | SS 304 | |
| 11 | 4 | NW80xNB80 SCH40 Pipe Reducer | NW80 x NB80 SCH40 | SS 304L | AT-10-3PH-DTL-001 |
| 10 | 4 | NW80 Threaded Male | NW80 | SS 304 | |
| 9 | 1 | Plate Pack | 133 Plates | SS 304 | |
| 8 | 1 | Rear Stabilizer | Plate 1015x200x6 THK | SS 304L | |
| 7 | 2 | Guide Shaft | Ø50x1200 LG | SS 304L | |
| 6 | 12 | M30 Step Washer | Ø55x20 LG | SS 304L | AT-10-DT-001 |
| 5 | 6 | Manufactured Brass Nut | M30x40 LG | Brass | |
| 4 | 6 | Manufactured Hex Bolt | M30x1000 LG | SS 304L | |
| 3 | 3 | Universal Foot Mount | Plate 183x75x10 TKH | SS 304L | |
| 2 | 1 | Pressure Plate | Plate 1065x480x30 THK | SS 304L | |
| 1 | 1 | Frame Plate | Plate 1100x480x30 THK | SS 304L | |

Bill of Materials

| REVISION | REV | DESCRIPTION | DRAWN | CHECKED | APPROVED | DATE |
|---|---|---|---|---|---|---|
| | A | ISSUED FOR APPROVAL | JD | DDB | DDB | 21.06.2025 |

AT-10 - 3 PASS HYGIENIC
PLATE AND FRAME HEAT EXCHANGER
GENERAL ARRANGEMENT

A3
SCALE : 1:16

AT-10 - 3 PASS HYGIENIC
HEAT EXCHANGER

APEX THERMAL

SUB CONTRACTOR DWG NO — Sheet of — REV
CLIENT DWG NO — Sheet of — REV
APEX DWG NO AT-10-3PH-GA-001 — Sheet 1 of 1 — REV A

This drawing is subject to return on demand and must not be copied or passed on to any third party; or used directly or indirectly for any other purpose that the design and construction to the order of APEX THERMAL